Specifications for EMH Style UHB-250
Top Running Bogie End Trucks
10 In. Diameter Wheels

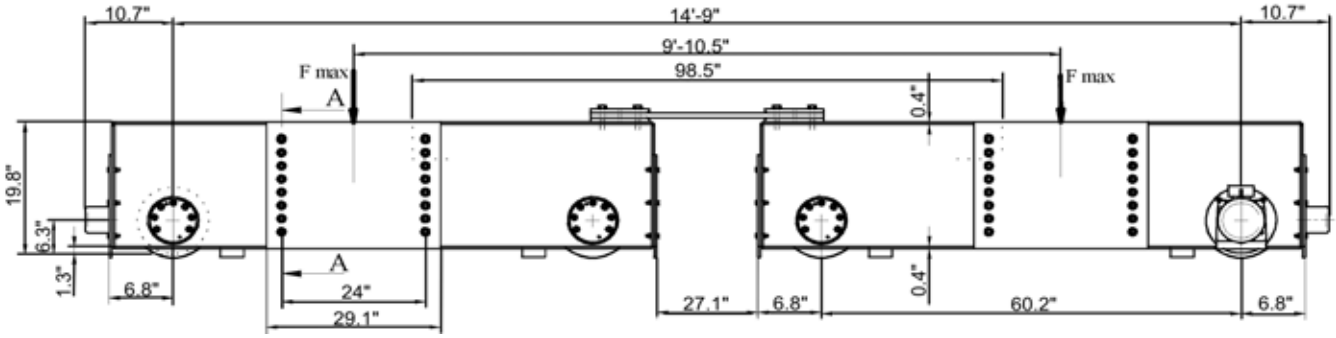

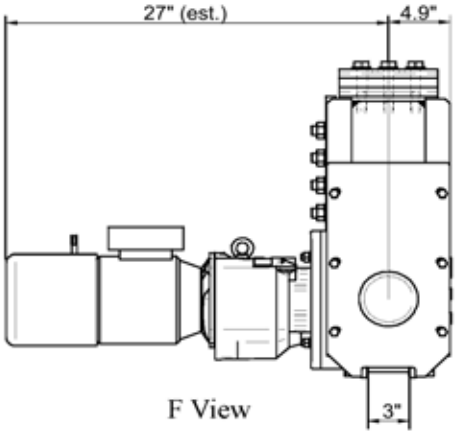

F View

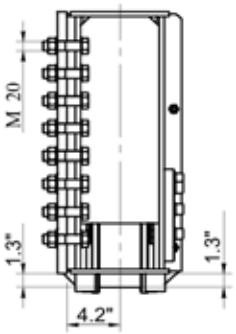

Section A-A

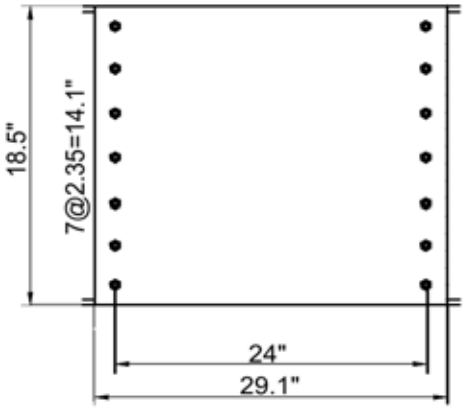

Endtruck/Girder Connection Plate

FRICTION SURFACE MUST BE ABSOLUTELY FREE FROM RUST, DUST AND OIL

Model No.	No. of Drives	F Load Lbs.	120 fpm Motor HP	Weight per Pair Lbs.
UHB-250.480.4200.1.25.73.2	2	58,450	2 x 5.0	4000

Engineered Material Handling